rothoblaas

Solutions for Building Technology

REQUEST FORM
WINGSPAN
SINGLE AND H LIFTING BEAMS

CUSTOMER DETAILS

COMPANY NAME

CONTACT DETAILS

contact person

email

telephone

COMPANY ADDRESS

DELIVERY ADDRESS
(if different)

ROTHOBLAAS TECHNICAL SALESMAN

CITY AND DATE

SIGNATURE

Rotho Blaas SRL
Via dell'Adige N.2/1 | I-39040, Cortaccia (BZ) | Italia | Tel. +39 0471 81 84 00
Fax. +39 0471 81 84 84 | E-mail info@rothoblaas.com | www.rothoblaas.com

rothoblaas

Solutions for Building Technology

70°C
-20°C
158°F / -4°F

4
Safety factor

CE
EN 13155

RiConnect
Connect to Safety

GENERAL INFORMATION

MATERIAL: high-strength steel structure with anti-rust protective coating and two coats of enamel.

COLOUR: RAL 2004 Pure orange.

EU Declaration of conformity, user and maintenance manual.

Each item is fitted with a SupraPlate NFC-RFID digital tag, allowing immediate access to up-to-date online documentation and easy management of traceability, checks and inspections.

LIFTING BEAMS

☐ SINGLE LIFTING BEAM



☐ H LIFTING BEAM

The H lifting beam with adjustable hooks allows dual adjustment of the lifting points, adapting to the size of the load. The structure consists of a main beam and two movable beams, which can be adjusted along the main beam.



LOAD CAPACITY

Requested load capacity: _____ kg / lb *(max 15,000 kg / 33,000 lb)*

Entry units (all fields): Imperial - lb / in — Enter values using selected units.

DIMENSIONS

For single lifting beams:

L_{min} _____ mm / in *(1000 - 3000 mm) (40 - 118 in)*

L_{max} _____ mm / in *(2000 - 6000 mm) (79 - 236 in)*

L_{tot} _____ mm / in *(2100 - 6100 mm) (83 - 240 in)*

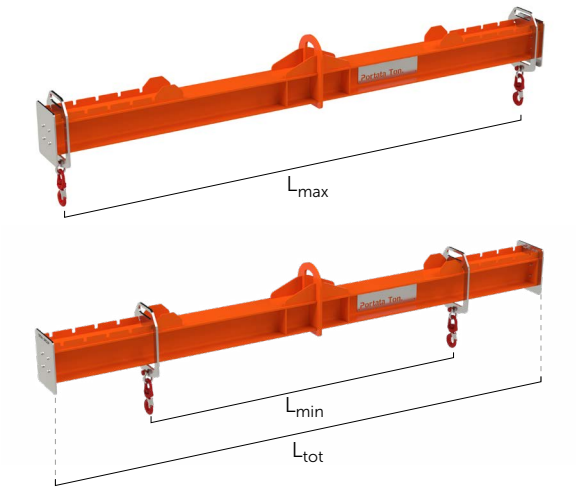

For H lifting beams:

A_{min} _____ mm / in *(1500 - 3000 mm) (60 - 118 in)*

A_{max} _____ mm / in *(3000 - 6000 mm) (119 - 236 in)*

B_{min} _____ mm / in *(900 - 1500 mm) (36 - 59 in)*

B_{max} _____ mm / in *(1500 - 3000 mm) (60 - 118 in)*

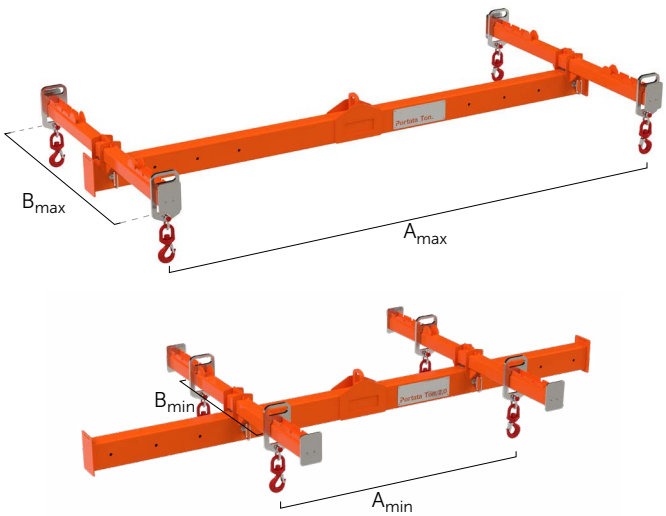

rothoblaas

Solutions for Building Technology

ACCESSORIES

TYPE OF HOOK



☐ Fixed hook



☐ Adjustable hook

TYPE OF CLOSURE



☐ Safety hook



☐ Self-locking hook

FORKLIFT ATTACHMENTS

Possibility for handling with forklift truck

☐ YES ☐ NO



OTHER

Rotho Blaas SRL
Via dell'Adige N.2/1 | I-39040, Cortaccia (BZ) | Italia | Tel. +39 0471 81 84 00
Fax. +39 0471 81 84 84 | E-mail info@rothoblaas.com | www.rothoblaas.com